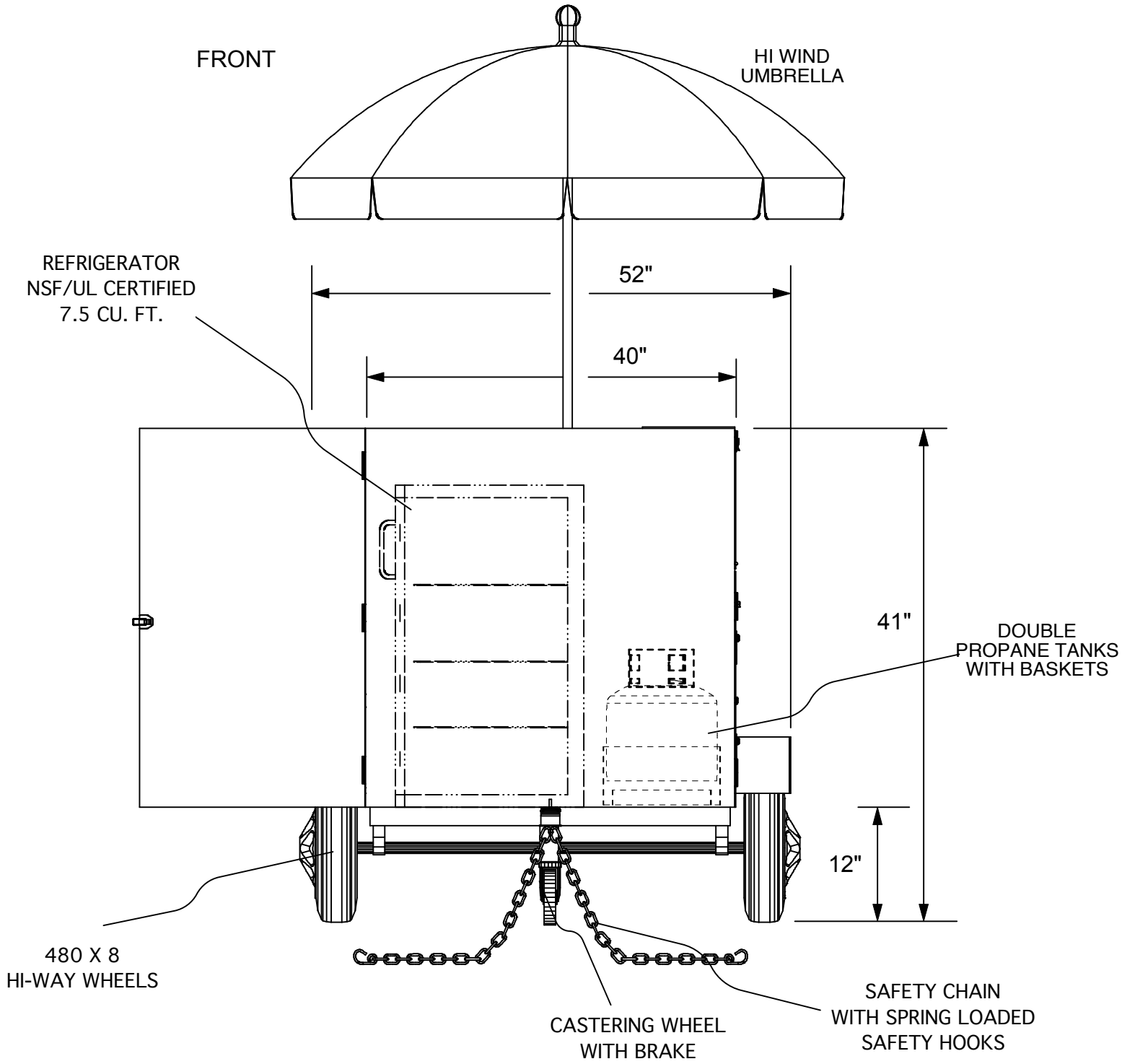
FRONT
HI WIND
UMBRELLA
REFRIGERATOR
NSF/UL CERTIFIED
7.5 CU. FT.
52"
40"
41"
DOUBLE
PROPANE TANKS
WITH BASKETS
12"
480 X 8
HI-WAY WHEELS
CASTERING WHEEL
WITH BRAKE
SAFETY CHAIN
WITH SPRING LOADED
SAFETY HOOKS