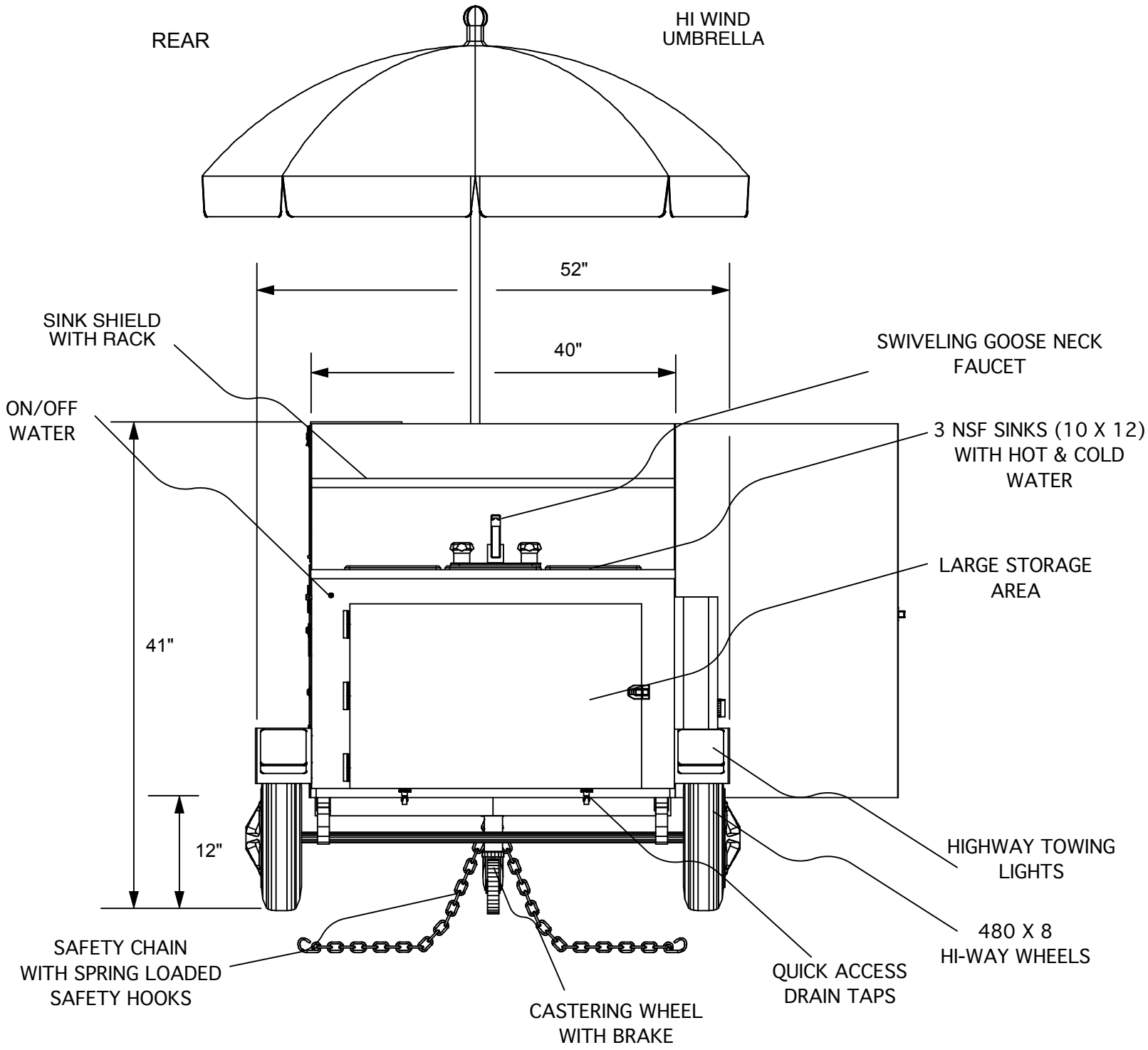
REAR
HI WIND
UMBRELLA
52"
40"
SINK SHIELD
WITH RACK
SWIVELING GOOSE NECK
FAUCET
ON/OFF
WATER
3 NSF SINKS (10 X 12)
WITH HOT & COLD
WATER
LARGE STORAGE
AREA
41"
12"
HIGHWAY TOWING
LIGHTS
480 X 8
HI-WAY WHEELS
SAFETY CHAIN
WITH SPRING LOADED
SAFETY HOOKS
QUICK ACCESS
DRAIN TAPS
CASTERING WHEEL
WITH BRAKE